Table of contents

1 General information / safety

1.1 Important preliminary information

Refer to operating instruction B 0.100.1.

1.2 Application

This operating instruction applies to diaphragm pump heads types

M 910 with pressure limiting valve and hydraulic snifting valve
For the drive element LEWA-ecosmart®- type LCA

The LEWA works number is stated in the technical data sheet and on the name plate at the drive element housing.

1.3 Performance and applicabilities

Refer to technical data sheet.

1.4 Safety

Refer to operating instruction B 0.100.1.

There is a danger of electrostatic charging in the case of plastic diaphragm pump heads (generation of sparks)!
Avoid rubbing and DO NOT dry clean.

1.5 Supply connections

Refer to operating instruction B 0.100.1.

1.6 Emissions

Refer to operating instruction B 0.100.1.

2 Transportation and intermediate storage

Refer to operating instruction B 0.100.1.

3 Product information

3.1 General description

Refer to operating instruction B 0.100.1.

3.2 Construction and method of operation

3.2.1 Construction

The **diaphragm pump head** is divided into three functional chambers (see figure 1).
The fluid conveyed flows through the operating chamber (A), the pressure chamber (B) contains the pressurised oil and the oil sump (C) which is under no pressure.
Operating chamber (A) and pressure chamber (B) are separated by a sandwich diaphragm (527).
The operating chamber (A) is hermetically sealed off to atmosphere by static seals at the diaphragm body (526) and the suction and discharge valves (509,513).
The barrier between pressure chamber (B) and oil sump (C) is provided by the plunger (502), the hydraulic snifting valve (529) and the pressure limiting valve (consisting of 550, 551, 552, 553).

3.2.2 Method of operation

Starting from the rear dead centre of the plunger movement the individual steps during an operating stroke of the diaphragm pump head proceed as follows:
The plunger (502) starts with its movement in direction of the diaphragm pump head.
At the same time the hydraulic snifting valve (529) closes the connection from the pressure chamber (B) to the oil sump (C) and the lubricating oil is compressed up to the pre-tension pressure of the spring-diaphragm unit (527, 595, 596, 599).

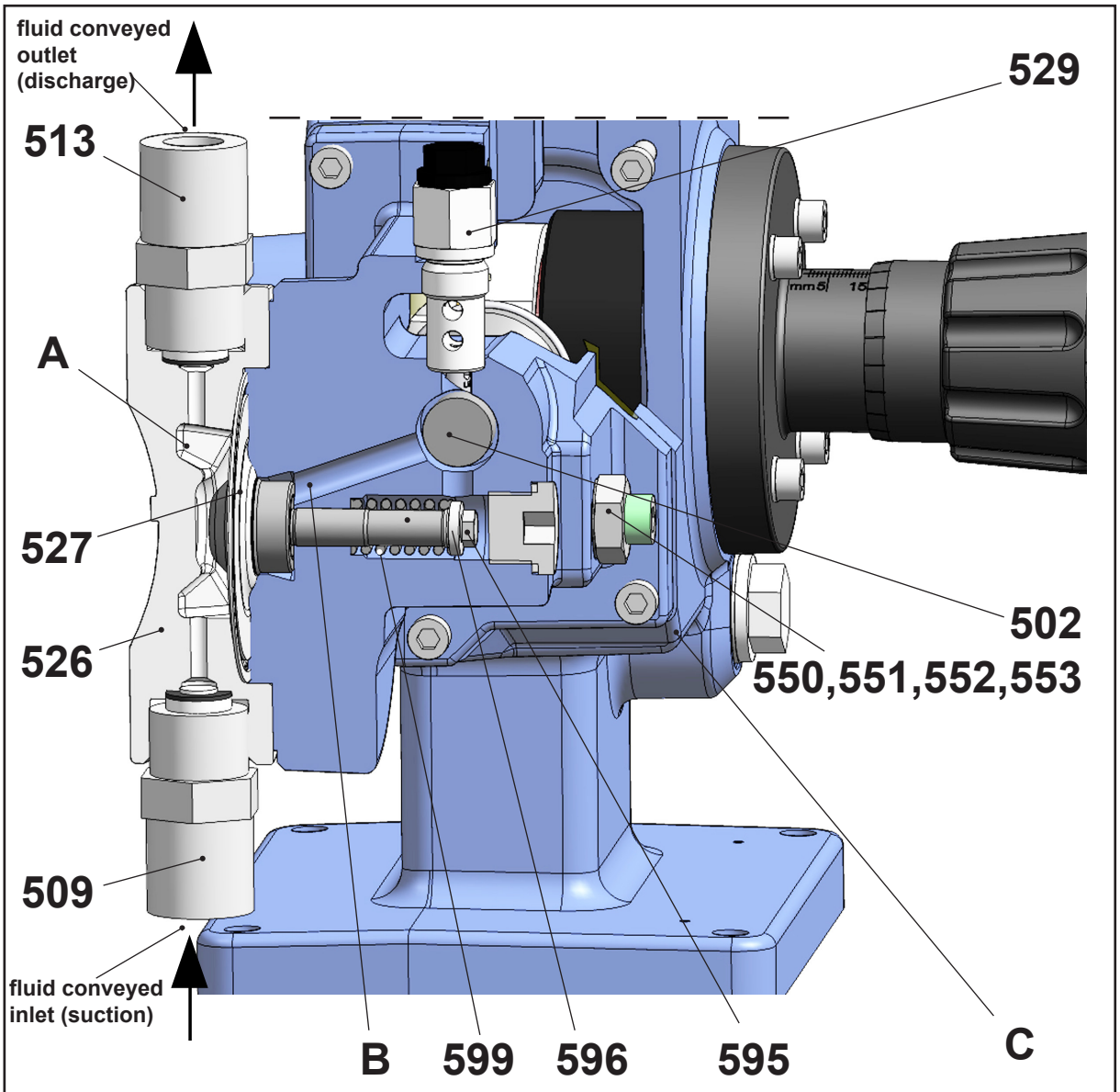

Fig. 1

Now the diaphragm starts to move from its rear dead centre and compresses the fluid conveyed in the operating chamber (A).
When the operating pressure is reached the discharge valve (513) opens and the fluid conveyed is displaced into the discharge line.
After the plunger has reached the front dead centre the movement is reversed, the suction stroke starts.
Plunger and diaphragm move backwards. Thus the pressure in the operating chamber (A) falls below the discharge pressure and the discharge valve (513) closes again.
The fluid pressure is further reduced up to the suction pressure. Now the suction valve (509) opens and the fluid conveyed is drawn from the suction line into the operating chamber (A).
During the suction process the sandwich diaphragm (527) and the plunger (502) always move in the same direction.
At the end of the suction stroke the sandwich diaphragm reaches (527) its rear dead end position, the spring load is decoupled and the pressure in the pressure chamber (B) falls slightly below atmospheric level.
Now the hydraulic snifting valve (529) located at the top opens and the leakage discharged into the oil sump (C) during the discharge stroke is replenished during the remaining plunger movement to the rear dead centre.

The main advantages of the M910 operating principle are:

- High suction ability of the LEWA-ecosmart®- metering pump because suction flange pressures close to the vapour pressure of the fluid conveyed are possible.
- High efficiency and metering accuracy under difficult suction conditions because the mechanical-hydraulic pre-tension of the pressure chamber (B) prevents formation of gas bubbles.
- High diaphragm life times due to the centrally guided, pre-shaped diaphragm with exactly defined and optimised design for the conveying movement.

The LEWA-ecosmart®- metering pump is not damaged if the suction line is blocked (e.g. by sedimentation or a closed suction shut-off valve). In this condition vaporisation and cavitation occurs in the operating chamber (A) during each suction stroke. After elimination of the obstruction on the suction side the gas formed in the operating chamber (A) is displaced into the discharge line via the discharge valve (513). After a short time the LEWA-ecosmart®- metering pump starts operating properly again.

The diaphragm pump is protected against overstressing of the diaphragm even after a longer shut-down period as the sandwich diaphragm (527) always moves back to the rear dead end position due to the spring load and remains in the rear position even in case of a vacuum in operating chamber (A).

3.2.2.1 Hydraulic snifting valve (529)

The hydraulic snifting valve (529) establishes a stable balance for the exchange of lubricating oil between pressure chamber (B) and the oil sump (C).
In normal operation it replenishes the regular leakage occurring at the plunger.
During start-up of the diaphragm pump head or after activation of the pressure limiting valve due to a problem in the plant it assures that a constant flow is reached fast by removing the gas bubbles from the pressure chamber (B).

3.2.2.2 Pressure limiting valve (consisting of 550, 551, 552, 553)

If the LEWA-*ecosmart*®- metering pump delivers into a pressurized system the installation must always be protected by a separate safety valve!

The pressure limiting valve protects the LEWA-ecosmart®- metering pump against overload caused by excessive pressures in the operating chamber (A) and in the pressure chamber (B).

The pressure limiting valve is set to the relief pressure stated in the technical data sheet.
When this pressure is exceeded, e.g. because a shut-off valve in the discharge line is closed, the pressure limiting valve will open and the lubricating oil displaced by the plunger (502) will flow from the pressure chamber (B) into the oil sump (C).
During the subsequent suction stroke the sandwich diaphragm (527) will bottom against the rear support face after a short plunger movement already and the hydraulic snifting valve (529) will open. Then the plunger (502) will draw-in lubricating oil from the oil sump (C) via the hydraulic snifting valve (529).

Activation of the pressure limiting valve will lead to an internal by-pass of the lubricating oil in the diaphragm pump head, the so-called “circulating”.

The high flow velocities which develop during the relief action lead to foaming-up of the lubricating oil in the oil sump (C). Because of this only a fraction of the stroke volume is returned into the pressure chamber (B) via the hydraulic snifting valve during the next suction stroke. Consequently circulating does not occur at each discharge stroke during a longer upset condition period. This reduces the heating-up of the lubricating oil and the load on the pressure limiting valve as well as the drive.
After correction of the upset condition, which has led to circulation, the LEWA-ecosmart®- metering pump will start to function properly again after a short time.

In spite of all measures circulating for a longer period of time could damage the pressure limiting valve and other parts.

3.2.2.3 Sandwich diaphragm (527) with diaphragm monitoring

The sandwich diaphragm with diaphragm monitoring allows a fast and safe detection of damage of one diaphragm layer without immediate restrictions on the operation of the LEWA-ecosmart®-metering pump or plant. During the permissible remaining operating time of the LEWA-ecosmart®-metering pump until diaphragm replacement the plant can undergo a scheduled shut-down and maintenance can be prepared.
If one of the diaphragm layers is damaged or leaking the fluid will penetrate into the space between the diaphragm layers and there will cause a pressure increase.
The diaphragm monitoring will indicate the pressure.
The LEWA-ecosmart®- metering pump can be operated for a limited time when the sandwich diaphragm is damaged.

When dangerous fluids are handled the LEWA-*ecosmart*®- metering pump must be shut-down immediately after diaphragm failure was detected.

3.2.2.4 Diaphragm monitoring with pressure switch for M9..

When the diaphragm is damaged the pressure switch will be activated.
The switching pressure is set to 1 bar in the factory.

Electric data: Switch NC
Load recommended 24VDC/2A (permissible 220 VAC/1A)
Wiring diagram see figure 2
EExi-protection: if powered intrinsically safe via an isolating switch amplifier

Pressure switch

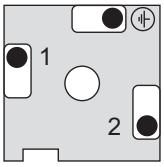

voltage-free contact opens at increasing pressure

Fig. 2

The operating pressure must be at least 1.5 bar above the ambient pressure.

When the discharge pressure is too low a pressure retaining valve (e.g. 1.6 bar setting pressure) must be installed.

3.2.2.5 Diaphragm monitoring by pressure gauge (pressure ranges: 60 bar, 160 bar)

The rated pressure of the pressure gauge should be at least 20% (minimum 3 bar) above the operating pressure.

3.3 Dimensions / weights / centres of gravity

Refer to operating instruction B 0.100.1 and enclosed dimensional drawing.

4 Erection and assembly

Refer to operating instruction B 0.100.1.

5 Commissioning / operation / shut down

5.1 Operation

For diaphragm monitoring refer to enclosed, separate operating instruction "Sandwich diaphragm with diaphragm monitoring B2.2900.4".

5.2 Operating and ancillary means

5.2.1 Lubricating oil

See technical data sheet (line 51/52), for volume refer to “parts list metering pump (item 110)”.
Use recommended lubricating oil only (refer to enclosed operating instruction " Drive unit", section 5.2).

5.3 Commissioning, start-up, venting

For operation in hazardous areas with a fluid conveyed with low electric conductivity (<50 pS/m), which could form explosive vapours in the conveying chamber of the LEWA-*ecosmart*®- metering pump during dry operation, dry operation is permissible depending on the surface of the plastic diaphragm and the gas group of the fluid conveyed (refer to the following table).
Dry running is not permitted for plastic versions under the above conditions!

The specifications for the material of the diaphragm pump head / diaphragm pump body (526) can be found in the parts list and on the technical data sheet.

Type of drive unit	Plunger diameter (mm)	Material of diaphragm pump body (526)	Gas group of the fluid conveyed	Dry operation permissible yes / no
LCA	6 - 42	Metal version (e.g. SS 316L alloy 20)	IIC	yes
LCA	6 - 42	Plastic version (PVC)	IIA / IIB / IIC	no

Please check if pressure conditions in suction and discharge line correspond to the values given in the technical data sheet!

Replace transportation screwed plug (80) by air filter (39) also supplied.
Check level of lubricating oil.

5.4 Adjustment and control

Refer to operating instruction B 0.100.1.

5.5 Shut down

Refer to operating instruction B 0.100.1.

5.6 Dismantling and return transportation

Refer to operating instruction B 0.100.1.

6 Maintenance and repairs

6.1 Maintenance

6.1.1 Inspection intervals

In order to prevent problems check lubricating oil level weekly.

1. Stop LEWA-ecosmart®- metering pump and wait for approx. 5 minutes.
2. Remove screwed plug of the hydraulic snifting valve (529) (see sketch).
3. The lubricating oil level indicated must be within the range of the cross bore visible from above (see figure 3).
4. If required top up lubricating oil. For this remove air filter (39).
   For lubricating oil volume and grade please refer to operating instruction B 1.660, section 5.2.
5. Reinstall air filter (39).

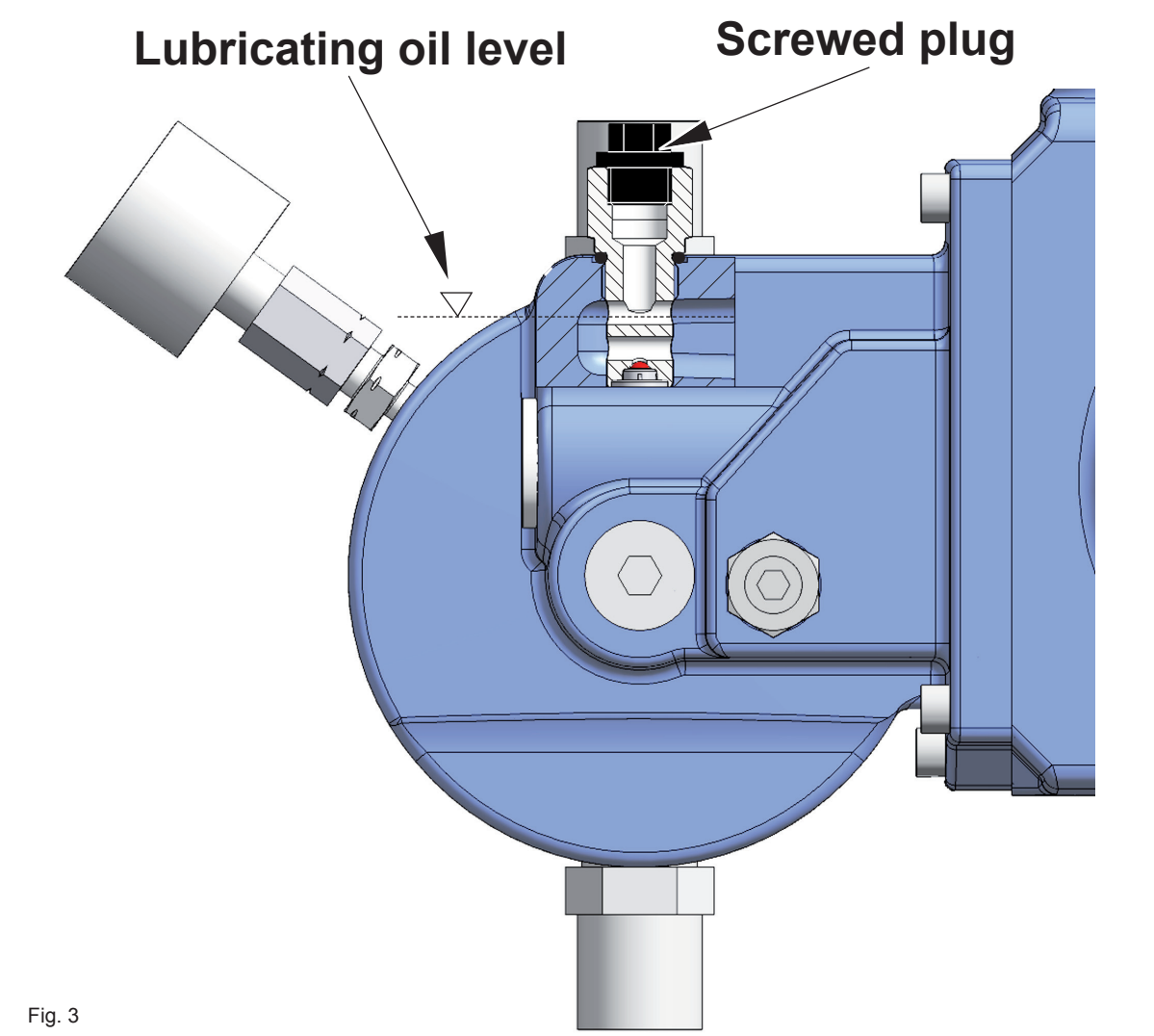

Fig. 3

For safety reasons we recommend to replace the sandwich diaphragm (527) once a year (refer to 6.3.3 and 6.4.3).

6.2 Repairs

Even after the LEWA-ecosmart®- pump has been shut down the operating chamber (A) contains the fluid conveyed. Assure that all safety and handling instructions for the fluid conveyed are observed!

Assure utmost cleanliness during dismantling and reassembly.
This is especially valid for all parts in contact with lubricating oil.

6.3 Dismantling

6.3.1 Suction and discharge valves (509 and 513)

1. In case of aggressive fluids it is recommended to flush the pipe line.

In case is insufficient flushing the fluid conveyed can leak out during dismantling!

2. Close shut-off valves and remove pipe lines.
3. Unscrew valve bodies (503 and 504).
4. If you remove the suction valve with the pump head still installed make sure that the valve does not drop out downwards after the valve body or the valve retaining flange has been loosened.

Make sure not to damage any sealing faces when dismantling the valves!

6.3.2 Draining of lubricating oil

Danger of burns when draining hot lubricating oil!
In case of diaphragm rupture the lubricating oil can contain fluid conveyed!

1. Undo screwed plug (40) at the side of the drive element and drain lubricating oil.
2. Unscrew hydraulic snifting valve (529) located on top and remove screwed plug (560) at the diaphragm pump head to drain the residues of the lubricating oil from the diaphragm pump head.

Assure environmentally safe draining and disposal of spent lubricating oil!

6.3.3 Sandwich diaphragm (527)

Even after thorough flushing, especially after diaphragm rupture, the fluid conveyed can be contained between the sandwich diaphragm, in the pressure chamber (B) as well as in the oil sump (C). Take the appropriate safety measures if required!

1. Remove pipelines.
2. Drain lubricating oil according to section 6.3.2.
3. During the work step following the pre-tension of the spring (599) is released. For this special, protective measures are required:

   Attention – danger of injury! Special attention is required when heavy corrosion took place in pressure chamber (B) due to insufficient lubricating oil quality or because of ingress of fluid conveyed having corrosive properties.
   When slackening screw (595) note that spring (599) is under high pre-tension!

   Carefully loosen screw (595) and take out disk / spring plate (596) and spring (599).
   Only then loosen screw (536) and unscrew it.
4. Remove diaphragm pump body (526) from diaphragm drive housing (501) without jamming it.

   Residues of lubricating oil can escape from the pressure chamber (B)!

5. Take sandwich diaphragm (527) from diaphragm drive housing out to the front (diaphragm pump body side).

   Especially during assembly of new diaphragms these must be handled carefully. The diaphragm layers must not be distorted!

   Do not damage any sealing faces!

6.3.4 Pressure limiting valve

Increase of the set pressure of a hydraulic pressure limiting valve above the works setting is only permissible after consultation with LEWA!
The LEWA-*ecosmart*®- metering pump can be overloaded and damaged!

6.3.5 Hydraulic snifting valve (529)

The lubricating oil can contain the fluid conveyed after diaphragm rupture!

The hydraulic snifting valve (529) can neither be dismantled nor adjusted. It is factory set to the snifting- and discharge volume matching the diaphragm pump head.
Cleaning as well as a visual and acoustic inspection can be carried out if required.
For this please unscrew the hydraulic snifting valve (529) from the diaphragm drive housing (501).
The bores of the hydraulic snifting valve (529) must not be contaminated or clogged.
The integrated closing body must be freely moveable. For this please shake the hydraulic snifting valve (529); movement of the closing body must be heard.
For problems you cannot correct yourself please order a replacement valve from LEWA.

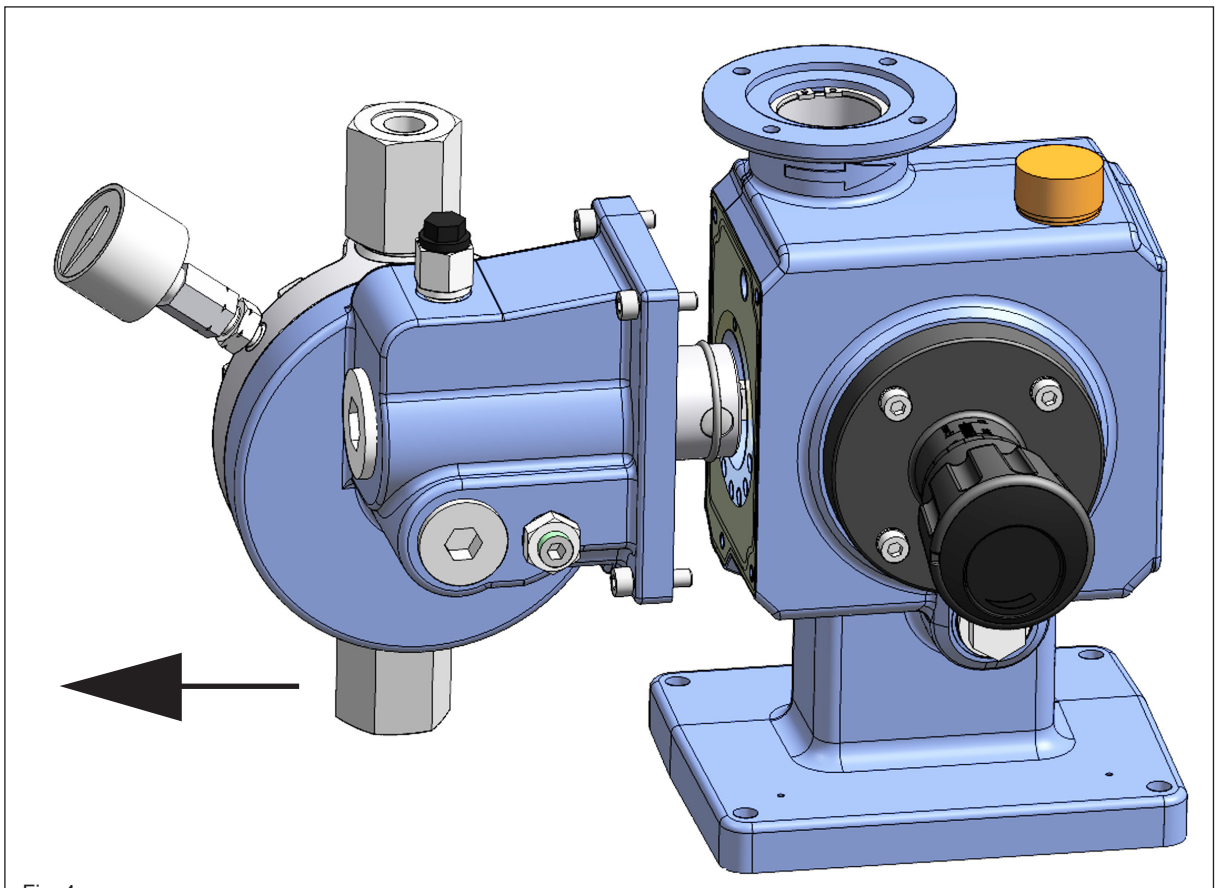

Fig. 4

6.3.6 Removal of diaphragm pump head from the LEWA-ecosmart®- metering pump

1. Please observe precautionary measures as per section 6.2.
2. Close shut-off valves in the pipe lines and take pipe lines off the diaphragm pump head. Undo screwed plug (40) at the side of the drive element and drain the lubricating oil.
3. Remove hydraulic snifting valve (529) located above and screwed plug (595) at the diaphragm pump head to drain the residues of the lubricating oil from the diaphragm pump head.

If the diaphragm was damaged fluid conveyed can leak out.
Assure environmentally safe draining and disposal of spent lubricating oil!

4. Heavy diaphragm pump heads must be appropriately supported or attached to a lifting device.
5. Loosen the fixing screws (Allen screws (30)) and pull off the diaphragm pump head without tilting (see fig. 4).

To avoid damage to the plunger (502) during dismantling plunger (502) must be supported from below when pulling the diaphragm pump head off!

6. Remove circlip (555) using an appropriate set of pliers.

Do not damage the sealing surface of plunger (502)!

6.4 Assembly

Proceed in reverse order to dismantling.

The following points which are important for the function must be observed:

1. All parts must be cleaned thoroughly and checked for proper condition.

The grooves of the diaphragm sealing areas must be undamaged and absolutely clean from any impurities as well as oil-free (see fig. 5)!

2. Coat all stainless steel threads with suitable lubricating oil for protection against seizing.

Make sure that this lubricating oil does not get into the inside of the valves!

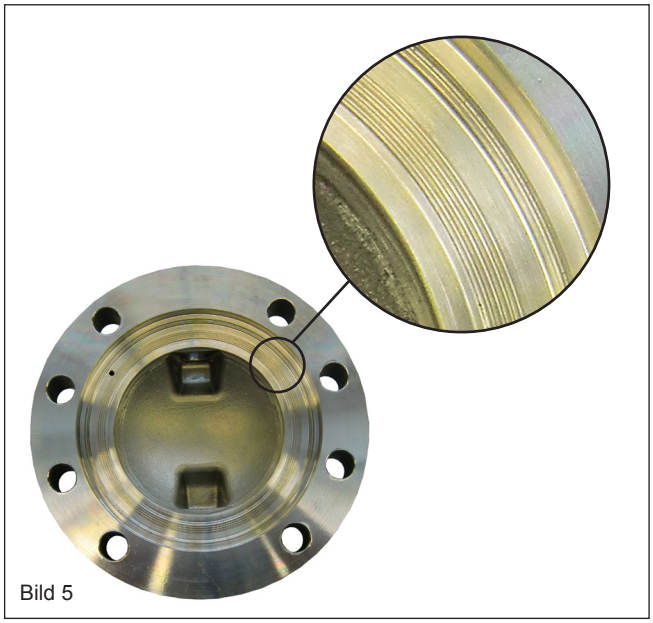

Bild 5

6.4.1 Sandwich diaphragm (527)

In the case of PVC diaphragm pump heads, the pressure from the diaphragm pump body (526) is not sufficient to prevent the sandwich diaphragm (527) from twisting during assembly.
The sandwich diaphragm (527) is therefore mounted differently, depending on the version:
Metal version (material e.g. SS316L or alloy 20): Assembly in accordance with section 6.4.3.1.
Plastic version (material PVC): Assembly in accordance with section 6.4.3.2.
The specifications for the material of the diaphragm pump head / diaphragm pump body (526) can be found in the parts list and on the technical data sheet.

6.4.1.1 Mounting the sandwich diaphragm (527) in the case of metal diaphragm pump heads

For the work steps following you must observe that the minimum temperature of the parts to be assembled is > +15 °C (otherwise there is the danger that the diaphragm will leak later)!

1. Slightly coat diaphragm drive (501) with lubricating oil around the turned out area of the sandwich diaphragm (527).
2. Place sandwich diaphragm (527) centrally in the diaphragm drive.

The diaphragm layers must not be distorted!

3. Coat hexagon head screw (595) with lubricating oil.
4. Install the spring (599) with the washer/spring plate (596) and fit the hexagon head screw (595) by hand It may only be screwed in by hand (do not use a power screwdriver)!
5. Place diaphragm body (526) at diaphragm drive housing (501) without jamming it.
   Tighten hexagon head screws (536) evenly by hand.
6. Observe the torque specified in the parts list when tightening hexagon head screw (536).

Raise the torque across corners in steps!
Required steps 5%, 10%, 20%, 50% and 100%.

7. Apply spring pre-tension manually via hexagon head screw (595).

Observe the torque specified in the parts list!

6.4.1.2 Mounting the sandwich diaphragm (527) in the case of plastic diaphragm pump heads.

The plastic version of the diaphragm pump body is formed on the outside in such a way that it can be used as an assembly aid (see fig. 6). The additionally required aids (2 grubscrews, matching wing nuts) are included as **assembly aids** in the spare part pack for the sandwich diaphragm.

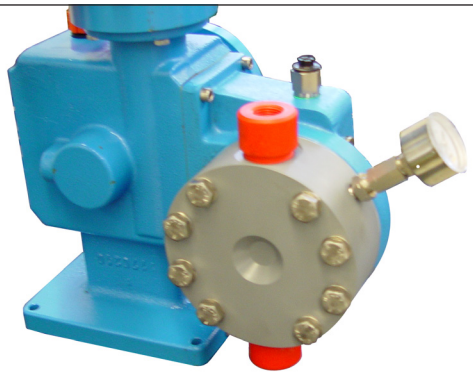

Fig. 6: Diaphragm pump body with assembly aid for sandwich diaphragm.

For the work steps following you must observe that the minimum temperature of the parts to be assembled is >+15 °C (otherwise there is the danger that the diaphragm will leak later)!

1. Slightly coat diaphragm drive (501) with lubricating oil around the turned out area of the sandwich diaphragm (527).
2. Place sandwich diaphragm (527) centrally in the diaphragm drive.

The diaphragm layers must not be distorted!

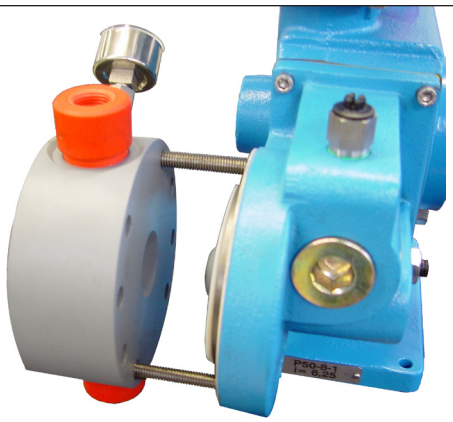

Fig. 7: Diaphragm pump body used as assembly aid.

3. Screw the two threaded rods (assembly aids) into the diaphragm drive housing (501).
4. Push the diaphragm pump body (526) onto the threaded rods with the side formed as an assembly aid at the front (see fig. 7).
5. Screw the diaphragm pump body (526) by hand onto the diaphragm drive housing (501) using the wing nuts (assembly aids).
   Tighten the wing nuts evenly when doing this.
   The sandwich diaphragm (527) is thus secured against twisting in the subsequent work steps.
6. Coat hexagon head screw (595) with lubricating oil.
7. Install the spring (599) with the washer/ spring plate (596) and fit the hexagon head screw (595) by hand It may only be screwed in by hand (do not use a power screwdriver)!
8. Apply spring pre-tension manually via hexagon head screw (595).

Observe the torque specified in the parts list!

The sandwich diaphragm (527) is now completely mounted and the diaphragm pump body (526) must now be mounted in the operating position:

9. Remove the wing nuts (assembly aids) and the diaphragm pump body and unscrew the threaded rods (assembly aids).
10. Turn the diaphragm pump body around and, without tilting it, place it with the fluid side on the diaphragm drive housing (501) and tighten the screws (536) evenly by hand. The assembly aid side is now on the outside again (see fig. 6).
    Observe the torque specified in the parts list when tightening screws (536).

Raise the torque across corners in steps!
Required steps 5%, 10%, 20%, 50% and 100%.

6.4.2 Suction and discharge valves

Metallic valve seats of ball valves should be re-lapped with a ball of the same diameter using lapping paste:

Up to valve size DN 10:	grain size < 5 µm (e.g. Tetrabor 1200, Elektroschmelzwerk Kempten GmbH),
starting from valves size DN 15:	grain size < 20 µm (e.g. Tetrabor 600, Elektroschmelzwerk Kempten GmbH),

For valves up to 15 mm nominal bore lapping tools are available from LEWA.
For plate valves valve seat and plate should be re-lapped on a plate of grey cast iron if the wear is minor or replaced if required.
Valve seats made of plastic are not reworked.

- Watch directions of flow when fitting the suction and discharge valves (509 + 513).
  The direction of flow is shown on the sectional drawing and marked on the suction and discharge valves (509 +513) as well as by an arrow cast into the diaphragm body.
- When the pressure limiting valve was dismantled reset according to section 6.5.3.1 if required.
  Utmost cleanliness is mandatory during assembly.

6.4.3 Plunger (502)

1. Install circlip (555) on plunger (502) next to the circumferential groove (see fig. 8).
2. Mount cylindrical pin (32) into plunger (502) and connecting rod (10) from the side (see figure 9).
3. Then push circlip (555) into groove of plunger (502) (see figure 10).

Fig. 8

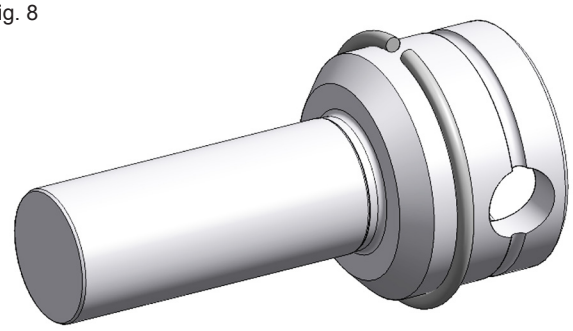

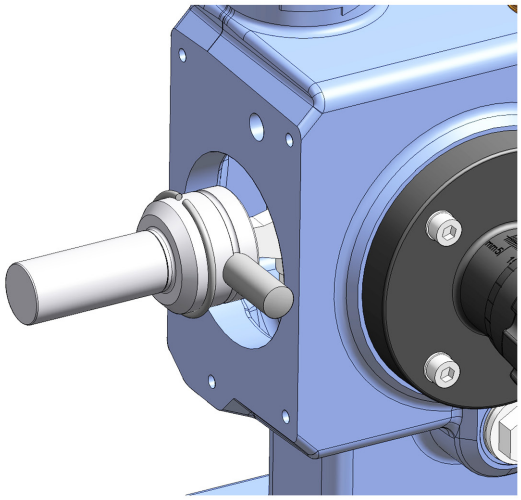

Fig. 8

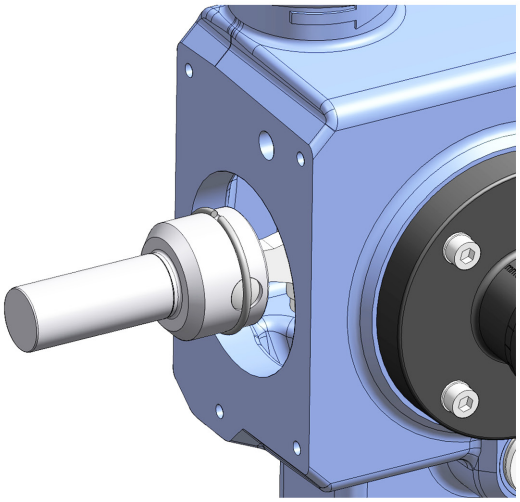

Fig. 10

6.5 Filling, venting, adjusting

6.5.1 Filling of the diaphragm pump head

1. Remove screwed plug from the hydraulic snifting valve (529).

Drive element and diaphragm pump head have a common oil sump.
The filling volume so also depends on the size of the diaphragm pump head and varies between 0,95 l and 1,1 l (see table).

Diaphragm pump head (plunger diameter in mm)	Required filling volume (approx) in litres
6 up to and including 17	0.95
22 up to and including 42	1.10

2. Unscrew air filter (39).
3. Fill required volume of lubricating oil into oil sump.
4. Wait until pressure chamber (B) has also filled with lubricating oil via the installation space of the hydraulic snifting valve (529).
5. The lubricating oil level must be within the cross bore visible from above (see figure 3).
   For lubricating oil volume see above, for lubricating oil grade refer to B 1.660, section 5.2.
6. Reinstall hydraulic snifting valve (529).
7. Screw air filter (39) back in.

6.5.2 Venting

The LEWA-ecosmart®- metering pump is self-venting during shut-down via the hydraulic snifting valve (529).
Under certain circumstances it can occur that the diaphragm pump head does not convey after first filling of the pressure chamber (B) because the gas content in the pressure chamber (B) is still too high. In this case the hydraulic snifting valve (529) should be removed again after a short period of operation and the lubricating oil should be replenished.

It is possible that, for the 6 mm plunger, a further procedure must be carried out during initial start-up after a diaphragm replacement or the change of the lubricating oil:

1. Hydraulic snifting valve (529) has to be installed.
2. **Measure and note distance "X"** (see figure 11) from the end of the grub screw (552) to hexagon nut (553).
3. Slacken the locking of hexagon nut (553) (do not unscrew completely, otherwise lubricating oil can leak out).
4. Unscrew grub screw (552) until a short oil circulation at low pressure takes place. This may cause air bubbles remaining during the filling procedure to be flushed out.
5. After recycle-pumping for a short time (a few seconds), screw in the grubscrew (552) to the originally noted dimension 'X' (see work step 2) and lock it with the hexagon nut (553).

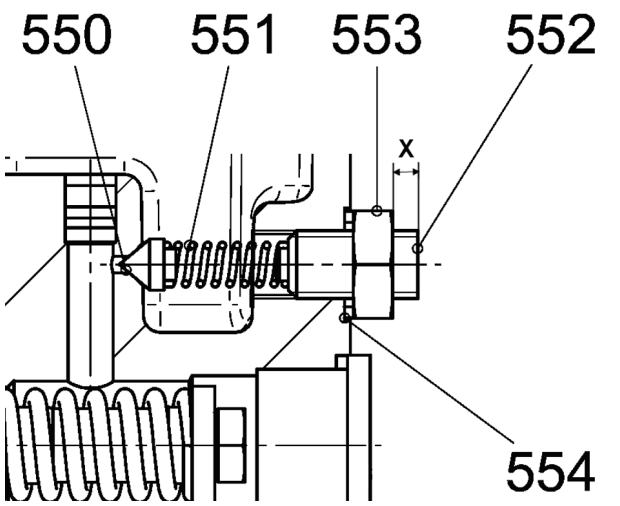

Fig. 11

Dimension "X" must not exceed 11,1 mm as otherwise lubricating oil may be lost!

6. Shortly slacken hydraulic snifting valve (529) (complete removal is not required) and retighten at the torque specified.

6.5.3 Setting and checking of the hydraulic valves

6.5.3.1 Pressure limiting valve (consisting of 550, 551, 552, 553)

1. Relax the thrust spring (551) of the pressure limit valve by releasing the lock hexagon nut (553). Loosen hexagon nut (553) slightly only, do not remove, as otherwise lubricating oil can leak out.
2. Screw out grub screw (552) to distance “X” (refer to following table).

Plunger dia. in [mm]	Distance „X“ [mm]
6 ;8;11	11.1
14;17	9.4
21;30	7.9
35;42	7.9

Dimension “X” must not exceed the distance given as otherwise lubricating oil may be lost!

3. Set LEWA-ecosmart®- metering pump to zero stroke.
4. Switch on LEWA-ecosmart®- metering pump and operate against closed discharge shut-off valve.
5. Set stroke to approx. 3 mm.
6. Pre-tension spring a little bit by screwing in grub screw (552).
7. Opening pressure on discharge can now be read at a pressure gauge installed between the LEWA-ecosmart®- metering pump and shut-off valve.
   Slowly increase spring tension until max. permissible resp. desired opening pressure is reached.
8. If no pressure increase takes place when spring pre-tensioning is increased the stroke length must be increased carefully until the pressure limiting valve is activated.

By no means screw-in grub screw by more than 3,5 turns from its starting point. Otherwise spring (551) can be destroyed.

We explicitly point out that incorrect setting of the pressure limiting valve could cause severe damages at the LEWA-ecosmart®- metering pump and thus means danger for persons, animals and the environment.

6.5.3.2 Hydraulic snifting valve (529)

The hydraulic snifting valve (529) can neither be dismantled nor adjusted. It is factory set to the snifting- and discharge volume matching the diaphragm pump head.
In case of damage or malfunction it must be replaced.

7 Faults; symptoms , remedial action

Fault	possible cause →	can be recognised by	remedial action
Metering pump does not deliver	- discharge shut-off valve closed. - back pressure too high (refer to technical data sheet). - discharge valve (513) wrongly fitted or jammed. - discharge dirt trap or line blocked.	- pressure limiting valve operates. Banging or knocking noise can be heard. - foam is building-up in the oil sump (C).	- open shut-off valve. - reduce discharge pressure. - dismantle discharge valve (513), check and re-install correctly. - clean dirt trap or discharge line.
	- metering fluid in the operating chamber solidified (for melts).	- Pressure limiting valve operates. Banging or knocking noise can be heard. Foam is building-up in the oil sump (C).	- improve heating of fluid metered
	- suction shut-off valve closed. - suction pressure too low (metering fluid strongly gassing off, see technical data sheet). - suction valve (509) wrongly fitted or jammed - suction dirt trap or line blocked.	- unusual running noise of metering pump. - unusual flow noises at discharge side due to cavitation, banging suction valve (509). - no working noise of the discharge valve (513).	- open shut-off valve. - check suction conditions (see B 0.100.1). - dismantle suction valve (509), check and re-install correctly - clean dirt trap or pipe line.
	- air in the operating chamber (A). - air in the pressure chamber (B). - oil level in the oil sump (C) too low.	check level of lubricant.	- vent metering pump (refer to section 6.5.2). - check installation (refer to B 0.100.1, section 4.4). - top up lubricant.
pump output over whole range too low 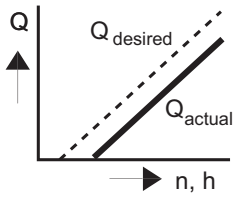	- suction (509) or discharge valves (513) leaking due to dirt or wear.		- clean or repair valves, check dirt trap.
	- pressure limiting valve valve or hydraulic snifting valve (529) leaking. - plunger seal or plunger (502) worn out.	leakage rate >> 2 % of the max. volume flow.	- clean valves or replace, clean oil sump (C) and fill in new lubricant. - replace plunger seal or plunger (502); clean metering pump check if suitable lubricant is filled in (see section 5.2.1).
pump output too low at long stroke lengths or high stroking rates 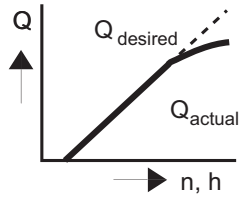	- pressure losses in the discharge line are too high.	pressure limiting valve responds.	- re-calculate pipeline and modify accordingly if required (see B 0.100.1, section 4.5.2).
	- shut-off valve in the suction line not fully opened, dirt trap fouled up.		- open all valves completely, clean dirt trap.
	- pressure losses in the suction line too high or suction pressure too low, fluid conveyed or lubricant forms gas or cavitates.		- re-calculate pipeline and modify accordingly if required (see B 0.100.1, section 4.5.2).

Fault	possible cause ➔	can be recognised by	remedial action
pump output excessive 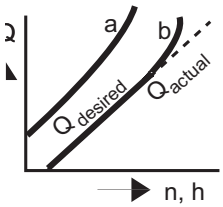 flow conveyed fluctuates at or above $Q_{des.}$	- static pressure at suction flange higher than at discharge flange.	fluid metered passing through the diaphragm pump head with metering pump at rest	- reduce suction pressure, elevate metering pump, provide positive differential pressure. LEWA would be pleased to give advice.
	- inertia forces in the pipe-line cause pressure in the suction line to momentarily exceed the pressure in the discharge line.	loud, knocking noises, strong vibration in suction or discharge line.	- re-calculate pipeline and modify accordingly if required (see B0.100.1, section 4.5.2).
flow conveyed fluctuates but remains smaller than $Q_{des.}$	- fluid metered contaminated or gas entrained.		- check dirt trap and improve, de-gas fluid conveyed.
	- valves defective.		- refurbish or replace unsuitable or defective valve components.
flow conveyed falls off 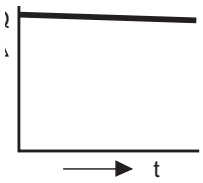 	- gas formation in the operating chamber (A). Generally causes difficulties at flows conveyed < 50l/h.	full flow conveyed is restored after brief increase of the stroke length or frequency.	- install special valves. Please enquire from LEWA. Optimize piping installation. LEWA would be pleased to assist you.

Issue 03-2012